1 -Comp. Loc.: Central Locking

- ⇒ “1.1 Antitheft Alarm System ”, page 1
- ⇒ “1.2 Central Locking System ”, page 2

1.1 Antitheft Alarm System

Note

Antitheft Alarm System on US/Can. models does not include interior monitoring.

Protected by copyright. Copying for private or commercial purposes, in part or in whole, is not permitted unless authorised by Volkswagen AG. Volkswagen AG does not guarantee or accept any liability with respect to the correctness of information in this document. Copyright by Volkswagen AG.

1 - Front passenger door contact switch -F3-

1 - Front passenger central locking lock unit - F221-

2 - Right rear door contact switch -F11-

2 - Right rear central locking lock unit - F223-

3 - Interior monitoring sensor -G273-
- ❑ Not applicable to US/Can

4 - Rear lid lock/alarm/central locking switch -F124-

4 - Rear lid unlock switch -E165-

5 - Interior monitoring transmitter -G274-
- ❑ Not applicable to US/Can

6 - Left rear door contact switch -F10-

6 - Left rear central locking lock unit -F222-

7 - Alarm system horn -H8-
- ❑ On vehicles with Antitheft protection system without interior monitoring system
- ❑ Installed left rear in luggage compartment above wheel house

8 - Driver door contact switch -F2-

8 - Driver central locking lock unit -F220-

9 - Interior monitoring deactivation switch -E267-
- ❑ Not applicable to US/Can

9 - Interior monitoring deactivation switch illumination bulb -L118-
- ❑ Not applicable to US/Can

10 - Comfort system central control module -J393-
- ❑ Installed in front left foot well

11 - Alarm horn -H12-
- ❑ Not applicable to US/Can

12 - Hood contact switch -F266-

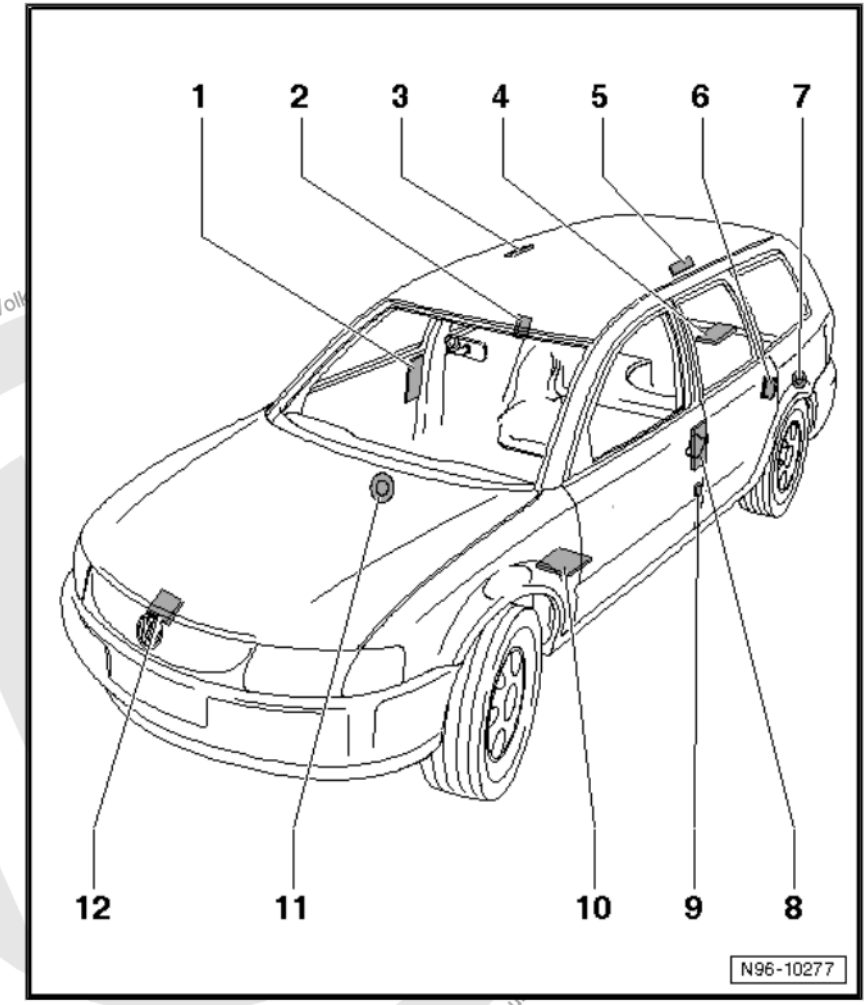

Protected by copyright. Copying for private or commercial purposes, in part or in whole, is not permitted unless authorised by Volkswagen AG. Copyright by Volkswagen AG.

1.2 Central Locking System

Protected by copyright. Copying for private or commercial purposes, in part or in whole, is not permitted unless authorised by Volkswagen AG. Volkswagen AG does not guarantee or accept any liability with respect to the correctness of information in this document. Copyright by Volkswagen AG.

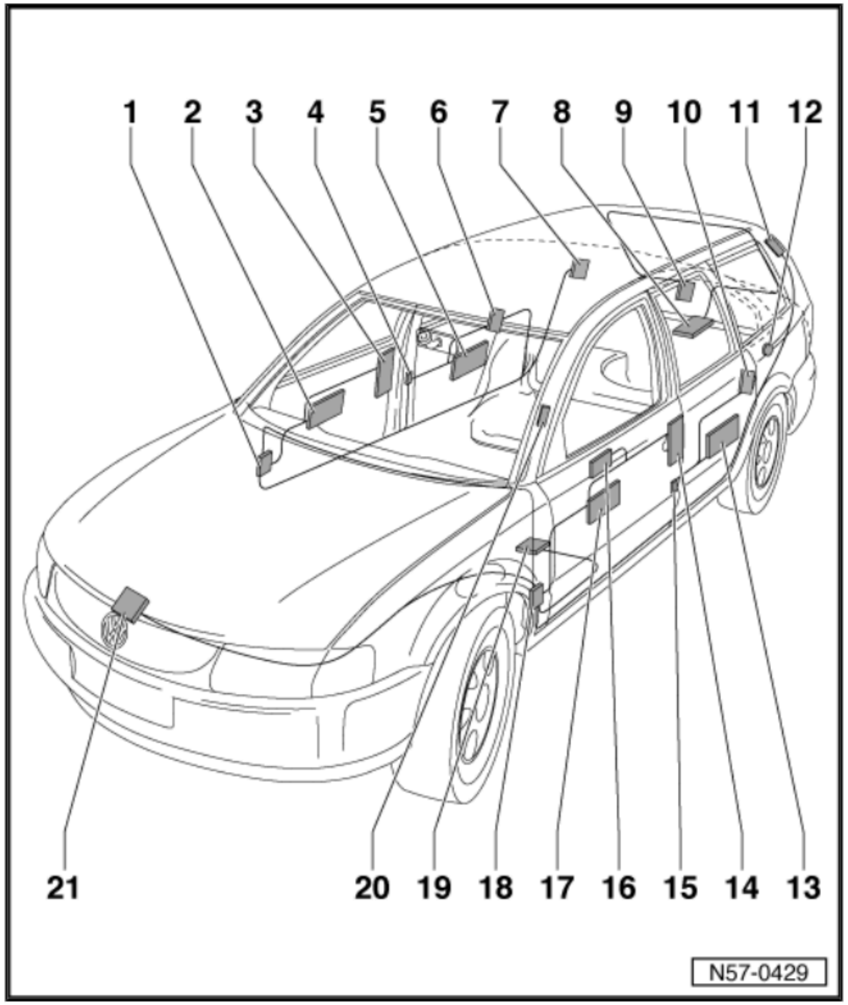

1 - Coupling station
- ❑ Component location: Lower A-pillar, covered by footwell trim

2 - Front passenger door control module -J387-
- ❑ Integrated in window regulator motor

3 - Front passenger central locking lock unit -F221-
- ❑ Door lock is secured to assembly carrier
- ❑ Electrical central locking system is integrated in door lock

4 - Coupling station
- ❑ Component location: on B-pillar

5 - Right rear door control module -J389-
- ❑ Integrated in window regulator motor

6 - Right rear central locking lock unit -F223-
- ❑ Door lock is secured to assembly carrier
- ❑ Electrical central locking system is integrated in door lock

7 - Fuel filler door unlock motor -V155-
- ❑ Component location: Under right luggage compartment trim

8 - Central locking switch in rear lid -F218-

8 - Rear lid central locking system motor -V53-

9 - Trunk lid positioning motor
- ❑ Component location: At trunk lid, inside

10 - Left rear central locking lock unit -F222-
- ❑ Door lock is secured to assembly carrier
- ❑ Electrical central locking system is integrated in door lock

11 - Coupling station
- ❑ Component location: rear roof crossmember, covered by roof trim

12 - Alarm system horn -H8-
- ❑ On vehicles with Antitheft protection system without interior monitoring system
- ❑ Component location: C-pillar, covered by luggage compartment trim

13 - Left rear door control module -J388-
- ❑ Integrated in window regulator motor

14 - Driver central locking lock unit -F220-
- Door lock is secured to assembly carrier
- Electrical central locking system is integrated in door lock

15 - Coupling station
- Component location, lower B-pillar

16 - Central switch for window regulator
- Component location: installed in door trim

17 - Driver door control module -J386-
- Integrated in window regulator motor

18 - Coupling station
- Component location, lower A-pillar

19 - Comfort system central control module -J393-
- Component location: Installed in vehicle floor, in front of driver's seat in an E-box

20 - Central locking and anti-theft alarm system antenna -R47-
- Component location : A-pillar

21 - Hood alarm switch -F120-
- Contact switch for nativity warning system, cannot be replaced individually
- Component location: On hood lock

Protected by copyright. Copying for private or commercial purposes, in part or in whole, is not permitted unless authorised by Volkswagen AG. Volkswagen AG does not guarantee or accept any liability with respect to the correctness of information in this document. Copyright by Volkswagen AG.